VISIOM WAND

(An assistive device for blinds)

PID-BSIT-19-22

Project Advisor: Ms. Faiza Tariq

Submitted By:

Muzamal Hussain	BSF1900069
Muhammad Sufyan	BSF1900133
Ali Awais Mughal	BSF1900410

University of Education

VISIOM WAND

(An assistive device for blinds)

BS in Information Technology 2019- 2023

A project submitted in partial fulfillment of the
requirements for the award of the degree of
BS in Information Technology

DIVISION OF SCIENCE & TECHNOLOGY

TOWNSHIP, UNIVERSITY OF EDUCATION

LAHORE

May 2023

© Copyright Visiom Wand, 2023

"We hereby declare that we have read this project documentation and, in our opinion, this project is sufficient in terms of scope and quality for the award of the degree of BS in Information Technology."

Project Primary Supervisor	Project Examiner
Name: Ms. Faiza Tariq	Name: Dr. Syed Ali Raza
Designation: Lecturer, IT	Designation: Assistant Professor
University of Education, Lahore	GCU, Lahore

DECLARATION

We declare that this project title entitled "**Visiom Wand**" is the result of our own research and development except as cited in the references. This project has not been accepted for any degree and is not concurrently submitted by a candidate for any other degree. At any time if my statement is found to be incorrect even afterward BS in Information Technology, the university has the right to withdraw my BS in Information Technology degree.

Signature: _____ Signature: _____

Name: Muzamal Hussain Name: Muhammad Sufyan

Date: 07-05-2023 Date: 07-05-2023

Signature: _____

Name: Ali Awais Mughal

Date: 07-05-2023

PLAGIARISM UNDERTAKEN

We solemnly declare that the project work presented in this documentation entitles **"Visiom Wand**" is solely our work with no significant contribution from any other person. Small contribution/help wherever taken has been acknowledged and that complete project has been written by us.

We understand the zero-tolerance policy of the HEC and the University of Education, Lahore towards plagiarism. Therefore, we as the author of the above-titled project declare that no portion of our project documentation and any material used as reference is properly referred to/ cited.

We undertake that if we are found guilty of any formal plagiarism in the above-titled project even after the award of the BS degree, the University reserves the right to withdraw/revoke our BS degree and that HEC and the University have the right to publish our name on the HEC/University Website on which names of students are placed who submitted plagiarized project.

Signature: _____ Signature: _____

Name: Muzamal Hussain Name: Muhammad Sufyan

Date: 07-05-2023 Date: 07-05-2023

Signature: _____

Name: Ali Awais Mughal

Date: 07-05-2023

CERTIFICATE OF APPROVAL

This is to certify that the project work presented in this document entitled, **"Visiom Wand"**, was conducted by **"Muzamal Hussain", "Muhammad Sufyan", and "Ali Awais Mughal",** under the supervision of **"Ms. Faiza Tariq"**. No part of this project has been submitted anywhere else for any degree. This project is submitted to the **"Division of Science and Technology Township", University of Education"** and is a partial fulfillment of the requirements of the degree of BS in Information Technology.

Signature: _____

Name: Muzamal Hussain

Date: 07-05-2023

Signature: _____

Name: Muhammad Sufyan

Date: 07-05-2023

Signature: _____

Name: Ali Awais Mughal

Date: 07-05-2023

_____

Project Primary Supervisor

Name: Ms. Faiza Tariq

Designation: Lecturer, IT

University of Education, Lahore

_____

Project Examiner

Name: Dr. Syed Ali Raza

Designation: Assistant Professor

GCU, Lahore

OFFICE OF CONTROLLER OF EXAMINATION

NOTIFICATION

No: _____ Date: _____

It is notified for the nomination of all the concerned that Mr. (Muzamal Hussain), (Muhammad Sufyan), and (Ali Awais Mughal), are BS students of the Information Technology Department of the University of Education have completed all the requirements for the award of BS Degree in the discipline of Information Technology as per detail given hereunder:

BS In Information Technology

Cumulative Result

Credit Hours: _____

Registration No	**Complete Name**	**Course work**	**Project**	**Total**	**Cumulative Grade Point Average (CGPA)**
19-UE-00135	Muzamal Hussain				
19-UE-00258	Muhammad Sufyan				
19-UE-00832	Ali Awais Mughal				

Project Title: Visiom Wand

Name of Supervisor: Ms. Faiza Tariq

Signed by: _____

ACKNOWLEDGEMENT

We truly acknowledge the cooperation and help made by **Ms. Faiza Tariq**, of **University of Education**. She has been a constant source of guidance throughout the course of this project. We would also like to thank **Ms. Faiza Tariq**, **Lecturer, IT** from **University of Education** for his help and guidance throughout this project. We are also thankful to our friends and families whose silent support led us to complete our project.

Date: 07-05-2023

ABSTRACT

The development of an assistive device for visually impaired individuals aims to improve their independence and safety through the use of technology. This project focuses on designing and implementing a smart stick that is developed by the integration of multiple sensors and components. Visually impaired people face many challenges in daily life while navigating unfamiliar environment. Conventional assistive tools such as canes leads to accidents and injuries. Therefore, there is a need for an assistive device that would help the visually impaired individuals for their independence and security. The main goal is to develop a device that will be capable to detect the static hurdles, water and proficient in sending emergency mails with the current location (outdoor). The developed assistive device will demonstrate the ability to detect obstacles accurately and provide distinct audio signal in the form of beep to alert the user. The device's emergency communication system that is triggered by the accelerometer or push buttons will send mail notification containing location and temperature data to predefined emergency contact. The user can customize the detection range of the ultrasonic sensor, making the device adaptable in different environments. The successful development of this assistive device has the potential to improve the quality of life for visually impaired individuals. The device's features such as obstacle detection and emergency communication can contribute to increased independence and safety in various environments. The current design has limitations that can be addressed in future iterations such as expanding the range of ultrasonic sensor for large and moving obstacles. Improving the water detection sensor's sensitivity to differentiate between varying levels of moisture. Better the navigation system for indoor and outdoor.

Table of Content

CHAPTER NO.1 1
1. Gathering and Analyzing Information 2
1.1. Introduction 2
1.2. Problem Statement 2
1.3. Project Goals & Objectives 2
1.3.1. Goals 2
1.3.2. Objectives 2
1.4. Research Questions 3
1.5. Methodology 3
1.5.1. Available Methodologies 3
1.5.2. Chosen Methodology 3
1.5.3. Reasons for Chosen Methodology 4
1.6. Definitions, Acronyms and Abbreviations 4
1.6.1. Definitions: 4
CHAPTER NO.2 5
2. Software Requirement Specifications (SRS) 6
2.1. Stakeholders: 6
2.1.1. End Users 6
2.1.2. Caregivers 6
2.1.3. Developers and Engineers 6
2.2. Domain Requirement: 6
2.3. Functional Requirements: 7
2.4. Non-Functional Requirements: 7
CHAPTER NO.3 8
3. Analysis 9
3.1. Use Case Descriptions 9
3.1.1. Obstacle detection 9
3.1.2. Water detection 10
3.1.3. Auto Emergency Mail 11
3.1.4. Push Button Emergency Mail 12
3.1.5. Mail cancellation 13
3.2. Use case models 14
3.2.1. Obstacle detection use case model 14
3.2.2. Water detection use case model 14

3.2.3. Auto mail use case model 15
3.2.4. Push button mail use case model 15
3.2.5. Mail cancellation use case model 16
CHAPTER NO.4 17
4. Design 18
4.1. Circuit Diagram 18
4.2. Entity-Relationship Diagram (ERD) 19
4.3. Data Flow Diagram (Level 0) 20
4.4. Data Flow Diagram (Level 1) 21
4.5. Class Diagram 22
4.6. Sequence Diagrams 23
4.6.1. System sequence diagram 23
4.6.2. Obstacle detection sequence diagram 24
4.6.3. Water detection sequence diagram 24
4.6.4. Auto emergency mail sequence diagram 25
4.6.5. Push button mail sequence diagram 25
4.6.6. Mail cancellation sequence diagram 26
CHAPTER NO.5 27
5. Graphical User Interface 28
5.1. Smart Stick 28
5.2. On/Off Button 29
5.3. Scroller 29
5.4. Email Sender Button 30
5.5. Email Canceler Button 30
CHAPTER NO.6 31
6. TESTING 32
6.1. Introduction 32
6.2. Test Scenario 32
6.2.1. Obstacle detection test case 32
6.2.2. Water detection test case 33
6.2.3. Auto emergency mail test case 34
6.2.4. Push button mail test case 35
6.2.5. Cancel mail test 36
6.3. Test Plan 37
6.4. Definition of Test Cases 37

6.5. Test Case Specifications....37
6.5.1. TC01 37
6.5.2. TCO2....37
6.5.3. TCO3....38
6.5.4. TCO4....38
6.5.5. TCO5....38
6.5.6. TCO6....38
6.6. Test Cases Results....39
6.6.1. Black Box Test Cases 39
6.6.2. White Box Test Cases....40
CHAPTER NO.7....41
7. CONCLUSION AND FUTURE WORK 42
7.1. Conclusion....42
7.2. Future Work 42
7.2.1. Addition of a voice guidance system:....42
7.2.2. Addition of a voice command system:....42
7.2.3. Machine learning and computer vision:....42
7.2.4. Enhanced GPS accuracy: 42
7.2.5. Cloud-based data storage and analysis: 42
7.2.6. Improved battery life and power management: 42
7.2.7. Collaboration with other assistive technologies: 42
7.2. Appendix 43
7.2.1. Ultrasonic Sensor Specifications 43
7.2.2. Alert System 43
7.3. References:....43

Table of Figures

Figure 1: Obstacle Detection 14
Figure 2: Water Detection 14
Figure 3: Auto Mail Use Case Model 15
Figure 4: Push Button Mail 15
Figure 5:Mail Cancellation 16
Figure 6: Circuit Diagram 18
Figure 7: ERD Diagram 19
Figure 8: DFD Level-0 20
Figure 9: DFD Level-1 21
Figure 10: Class Diagram 22
Figure 11: System Sequence Diagram 23
Figure 12: Obstacle Detection Sequence Diagram 24
Figure 13: Water Detection Sequence Diagram 24
Figure 14: Orientation Detection Sequence Diagram 25
Figure 15: Push Button Mail Sequence Diagram 25
Figure 16: Mail Cancellation Sequence Diagram 26
Figure 17: Smart Stick UI 28
Figure 18: On/Off Button 29
Figure 19: Scroller 29
Figure 20: Email Sender Button 30
Figure 21: Email Canceller Button 30

Table of Tables

Table 2.1: Functional Requirement.....7
Table 2.2: Non-Functional Requirements.....7
Table 6.1: Obstacle Detection Test.....32
Table 6.2: Water Detection Test.....33
Table 6.3: Orientation Mail Test.....34
Table 6.4: Emergency Mail.....35
Table 6.5: Cancel Mail Test.....36

CHAPTER NO.1

GATHERING AND ANALYISING INFORMATION

1. Gathering and Analyzing Information

1.1. Introduction

The assistive technology is required to support blind and visually impaired people in carrying out activities in the fundamental activity categories, mobility and communication and access to information [1, 2]. There is therefore considerable potential for increasing accessibility to blind and visually impaired people, though further technical developments will be required [1, 3]. The "Visiom Wand focuses on the design and development of a smart stick that integrates various sensors and components to assist visually impaired individuals in navigating their environment and provide automatic and manually notification to their caregiver to provide safety.

1.2. Problem Statement

Blind individuals often face challenges in navigating unfamiliar surroundings or environments and detecting obstacles, leading to potential accidents and injuries [4]. Current assistive devices offer limited support in addressing these common issues accurately, emphasizing the need for a more advanced solution that combines obstacle detection, give awareness to user, and emergency communication systems.

1.3. Project Goals & Objectives

1.3.1. Goals

The goal of our Visiom Wand Project team is to develop, create and design an assistive device that helps to enhance the navigation and build up an emergency communication system for visually impaired individuals.

1.3.2. Objectives

Our project objectives include:

a. Developing and design a smart stick that integrated with multiple sensors to detect static hurdles and water rain.
b. Development of an emergency communication system that automatically alerts designated contact through mail by just changing orientation of device, in case of emergencies. Person can also alert the caregiver manually using button if he/she found him in trouble or emergency.
c. Evaluating and texting the device's performance, reliability, and user-friendliness in different environments.
d. Addressing any limitations, error, bugs in the current design to improve and enhance the device's overall effectiveness and accuracy.

1.4. Research Questions

The research is aiming the following questions:

a) How big is our potential market?
b) What other products and services are similar to ours?
c) Who are our top competitors?
d) Who is the primary user of our device?
e) Are needed requirements been taken successfully?
f) How the integration of these components assists the blind individuals in the detection of hurdles and to make them safe?
g) What is the best way to design an emergency mail system for the communication with the smart stick?
h) How device will perform better, user-friendly and reliable for the blind person?
i) What are the boundaries of current design and how can these limitations be addressed in future iterations?

1.5. Methodology

1.5.1. Available Methodologies

Several methodologies can be employed to design and develop the smart stick, including:

a. **Literature review and analysis** of pre-made assistive devices for visually impaired individuals.
b. **Experimental research** which involves the development of prototypes, their evaluation and performance.
c. **User centered design** that is focusing on the requirements of visually impaired individuals.
d. Held **surveys and interviews** with visually impaired individuals and experts in required field to gain insights of the desired functionalities.

1.5.2. Chosen Methodology

Our project employs a mixture of methodologies:

a. **Literature review and analysis** of pre-made assistive devices for visually impaired individuals.
b. **Experimental research**, involving in the development of prototypes and evaluation about its performance.
c. **User centered design**, focusing on the needs and preferences of visually impaired individuals.
d. **Surveys** help out in actual problems to whom we are going to address.

1.5.3. Reasons for Chosen Methodology

The reasons for chosen methodology are:

a. The chosen methodologies allow for a comprehensive understanding of the current landscape of assistive devices and the identification of opportunities for improvement.
b. Experimental research enables the development and testing of prototypes to ensure their effectiveness in addressing the identified challenges.
c. User-centered design ensures the device meets the specific needs and preferences of visually impaired individuals, enhancing its usability and adoption.

1.6. Definitions, Acronyms and Abbreviations

1.6.1. Definitions:

a. Visually Impaired:

Visual impairment is a term experts use to describe any kind of vision loss, whether it's someone who cannot see at all or someone who has partial vision loss. Some people are completely blind, but many others have what's called legal blindness [5]**.**

b. Smart Stick

The wand with an assistive device designed to improve navigation and safety for visually impaired individuals by integrating various sensors and components.

c. ESP-32 (ES32)

ESP32 is a low-cost, low-power Microcontroller with an integrated Wi-Fi and Bluetooth [5].

d. Ultrasonic Sensor

An ultrasonic sensor is an instrument that measures the distance to an object using ultrasonic sound waves [5].

e. GPS

Global Positioning System, a satellite-based navigation system used in smart stick to provide location data for emergency communication [5].

f. Accelerometer

A sensor that measures the gravitational acceleration and rotational velocity, used in the smart stick to detect its orientation and inform about its current state. Detection [5].

g. LM2596

A step-down voltage regulator IC used in the smart stick to convert the input voltage from the battery to a suitable level for the ESP32 microcontroller and other components.

CHAPTER NO.2

SOFTWARE SPECIFICATIONS REQUIREMENTS

2. Software Requirement Specifications (SRS)

2.1. Stakeholders:

The stakeholders involved in our project are:

2.1.1. End Users

The main/primary stakeholders are the blind individuals. They will use the assistive device to navigate and communicate in the environment.

2.1.2. Caregivers

The secondary stakeholders include caregivers of the visually impaired users. They are interested in the safety and well-being of the users and will benefit from the emergency communication features of the smart stick.

2.1.3. Developers and Engineers

The developers and engineers who will design, build-up and maintain the smart stick are also the stakeholders.

2.2. Domain Requirement:

The domain requirements of our Visiom Wand project includes:

The smart stick is working within the assistive technology domain for blind individuals. Its having compliance with accessibility standards and guidelines. Considerations of user privacy and data security for location and emergency mail communication features.

2.3. Functional Requirements:

No	Requirement	Description
FR1	Power Button	• The user can on/off the device using power button.
FR2	Obstacle Detection	• Device/system will detect obstacles with an adjustable range of 10 cm to 200 cm and alert with short beeps.
FR3	Water Detection	• Device/system can detect water and alerts the user through long beeps.
FR4	Auto E-Mail	• Device can send mail with location and temperature to the caregiver in case of any emergency by just changing the orientation of stick.
FR5	Push Button E-Mail	• User can also send instant mail to emergency contact with location by pressing emergency button.
FR6	Cancel Button	• User can cancel mail by pressing button if it's wrongly done within a specific range.
FR7	Location and temperature	• Device can detect location(outdoor) and temperature of environment.

Table 2.1: Functional Requirement

2.4. Non-Functional Requirements:

No	Requirement	Description
NFR1	Durability	• The device should be designed to withstand regular use.
NFR2	Battery Life	• The 9-volt rechargeable battery will provide sufficient power to the device with long lasting battery power.
NFR3	Responsiveness	• The smart stick will provide timely alerts to user, ensuring quick adaptation to changing environments.
NFR4	Accuracy	• The obstacle detection and location features will be accurate and reliable.
NFR5	Ease of Use	• The smart stick will be simple to operate and requires minimal training required for users.
NFR6	Privacy and Security	• The device will protect user data and there will be a secure transmission of emergency communication of information

Table 2.2: Non-Functional Requirements

CHAPTER NO.3

ANAYLSIS

3. Analysis

3.1. Use Case Descriptions

3.1.1. Obstacle detection

UC Number: 1

UC Name: Obstacle detection

Functional Requirement No: FR2

Primary Actors: Blind user

Secondary Actors: Blind user

Description:
This use case describes the process of detecting obstacles in the blind user's path by utilizing the ultrasonic sensor with a required adjustment of sensor range by scrolled within range from 10cm to 200cm and alerting the user with short beeps [5].

Preconditions:

a. The assistive device is powered on and connected to Wi-Fi
b. The ultrasonic sensor is working properly and is being adjusted for required range.

Main Success Scenarios (MSS):

a. Device is turned on by blind person in outdoor environment.
b. The ultrasonic sensor emits high-frequency sound waves that bounce off obstacles within the detection range. The sensor receives the reflected sound waves (echo) which are passed to the ESP32 that processes the data.
c. The device alerts the user with short beeps indicating the presence of an obstacle and the blind user adjusts their path accordingly to avoid the detected obstacle safely.

Alternative Scenario:

a. The ultrasonic sensor fails to detect an obstacle due to material properties, or environmental conditions.
b. The device produces an emergency continuous alert.

Post Conditions:

a. The blind user has successfully navigated the detected obstacle and continues to move safely through their environment.

Extensions:

a. The device can incorporate additional sensors, such as infrared or LiDAR, to enhance obstacle detection capabilities and provide more accurate distance measurements.

3.1.2. Water detection

UC Number: 2

UC Name: Water Detection

Functional Requirement No: FR3

Primary Actors: Blind user

Secondary Actors: Blind

Description:
This use case describes how device will detect water by using the water detection sensor and alerts the blind user with long beeps to prevent the user from steeping into puddles.

Preconditions:

a. The assistive device is powered on and is connected to Wi-Fi
b. Water detection sensor is working properly.

Main Success Scenarios (MSS):

a. Device is turned on by blind person in outdoor environment.
b. The water detection sensor continuously scans the ground in the user's path and detects the presence of water on the surface.
c. ESP32 processes the water detection data and alerts the user with long beeps indicating the presence of water.
d. The blind user adjusts their path accordingly to avoid inconvenience in his/her path.

Alternative Scenario:

a. If the water sensor fails to detect an obstacle due to material properties, or environmental conditions.
b. The device produces an emergency continuous alert.

Post Conditions:

a. The blind user has successfully navigated the water and continues to move safely through their environment.

Extensions:

a. The device can incorporate additional sensors such as humidity/moisture sensors to enhance water detection capabilities and provide more accurate hazard assessments.

3.1.3. Auto Emergency Mail

UC Number: 3

UC Name: Auto emergency mail

Functional Requirement No: FR4

Primary Actors/Stakeholders: Blind user

Secondary Actors/Stakeholders: Caregiver

Description:
This use case describes the process of sending an auto emergency mail by the blind to the caregiver by changing the orientation of device. It includes the user's location and environmental temperature.

Preconditions:

a. The assistive device is powered on, connected to Wi-F, accelerometer and GPS are working properly.
b. The caregiver's contact information is stored in the device.

Main Success Scenarios (MSS):

a. The blind user experiences an emergency and rotates or change the orientation of stick.
b. After change in the orientation of device, it initiates a countdown of 20 seconds and alerts the user.
c. If the user does not cancel the notification within the countdown time.
d. The device will automatically send an email to the caregiver that contains the user's location and the temperature of the environment.
e. The caregiver receives the notification and can take appropriate action to assist the blind user.

Alternative Scenario:

a. If it is done by mistake than the blind user can cancel the mail within the countdown time to prevent an unnecessary mail to the caregiver.

Post Conditions:

a. If user cancels the mail by pressing mail cancelling button within the countdown time than device continues its other working either an extra mail will be received by the caretaker.

Extensions:

a. The device can integrate additional sensors such as gyroscope to enhance orientation change detection.

3.1.4. Push Button Emergency Mail

UC Number: 4

UC Name: Push Button Emergency Mail

Functional Requirement No: FR5

Primary Actors/Stakeholders: Blind user

Secondary Actors/Stakeholders: Caregiver

Description:
This use case describes that how the blind user can initiate an emergency mail to the caregiver by pressing an emergency button on the device. This mail comprises the user's current location and temperature of the environment to provide an accurate information to the caregiver about blind user.

Preconditions:

a. The assistive device is powered on and is connected to Wi-Fi.
b. The device have an access to the user's location and temperature of the environment.
c. The caregiver's contact information is stored in the device and the user is able to locate and press the emergency button when needed.

Main Success Scenarios (MSS):

a. The blind user percepts an emergency situation. He / She locates and presses the emergency button on the device.
b. The device will generate and send an email to the caregiver that contains the user's location and temperature of the environment.
c. The caregiver receives the notification and takes appropriate action to assist the blind user.

Alternative Scenario:

a. The blind user accidentally presses the emergency button, triggering an unnecessary alert to the caregiver. User can cancel mail using email cancel button.

Post Conditions:

a. The caregiver gets aware of the emergency and can provide the necessary assistance to the blind user.

Extensions:

a. The device can incorporate additional communication options, such as sending a pre-stored text message to the caregiver during an emergency.

3.1.5. Mail cancellation

UC Number: 5

UC Name: Mail cancellation

Functional Requirement No: FR5, FR7

Primary Actors/Stakeholders: Blind user

Secondary Actors/Stakeholders: Caregiver

Description:
This use case describes the process by which the blind user can cancel already initiated emergency mail either by emergency button or by changing orientation of the device.

Preconditions:

a. User press mail cancellation button with 20 seconds.

Main Success Scenarios (MSS):

a. Blind user cancels the already initiated emergency mail either by emergency button or by changing orientation of the device.

Alternative Scenario:

a. The blind user accidentally presses the emergency button, triggering an unnecessary alert to the caregiver. He can cancel mail using email cancel button.

Post Conditions:

a. Either, the caregiver gets mail and take necessary actions.

Extensions:

a. The device can incorporate additional communication options, such as sending a pre-stored text message to the caregiver during an emergency.

3.2. Use case models

3.2.1. Obstacle detection use case model

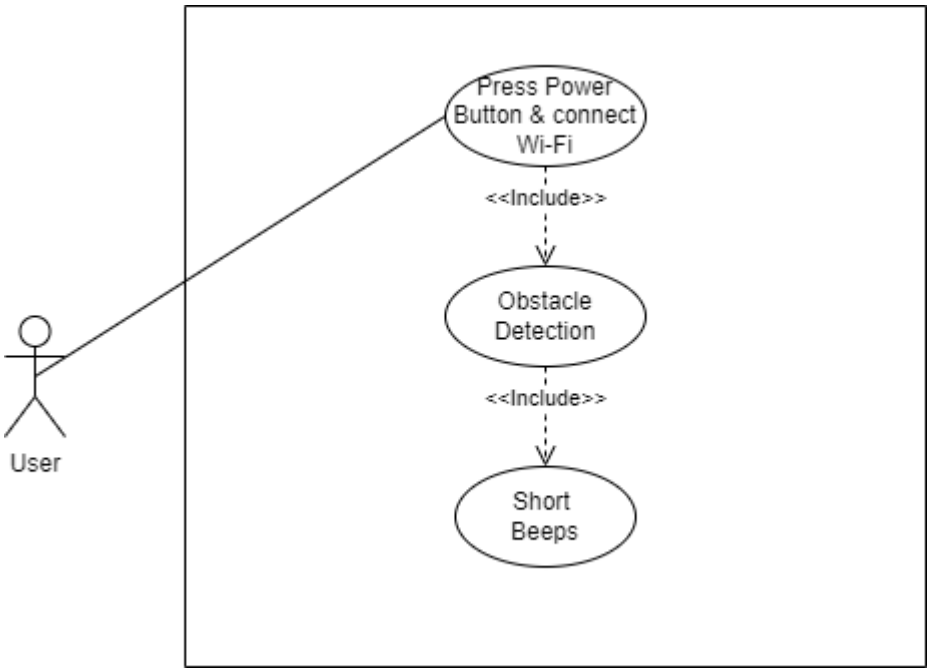

Figure 1: Obstacle Detection

3.2.2. Water detection use case model

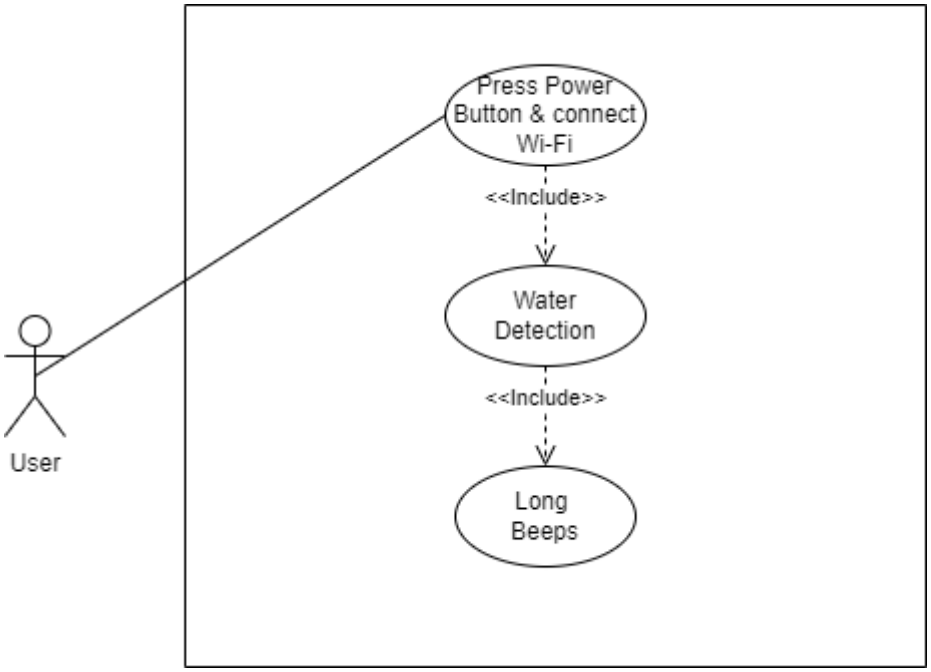

Figure 2: Water Detection

3.2.3. Auto mail use case model

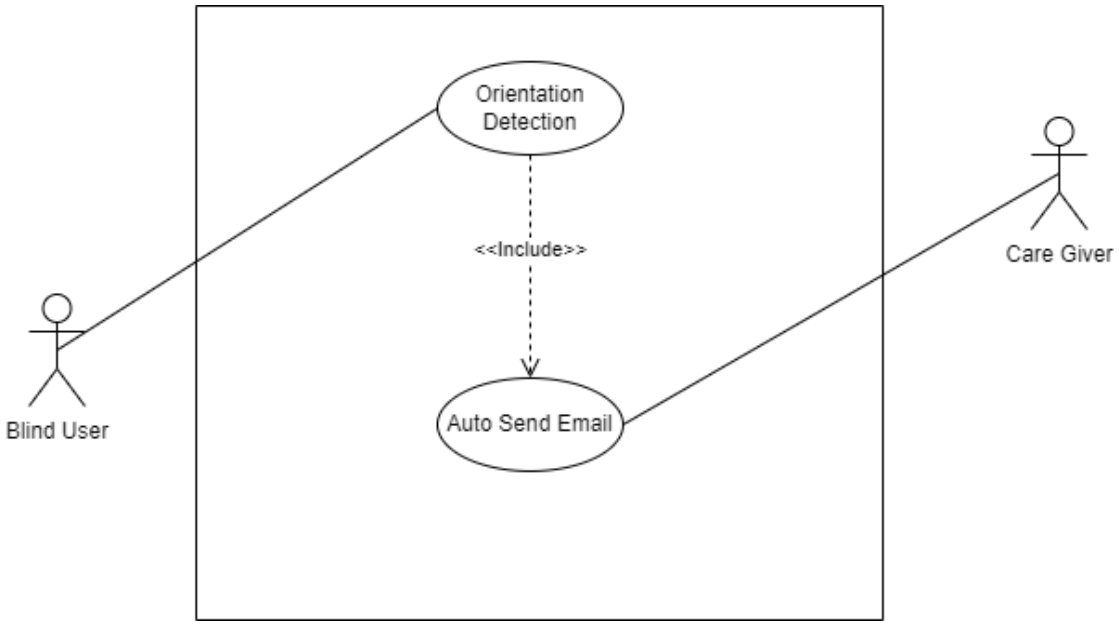

Figure 3: Auto Mail Use Case Model

3.2.4. Push button mail use case model

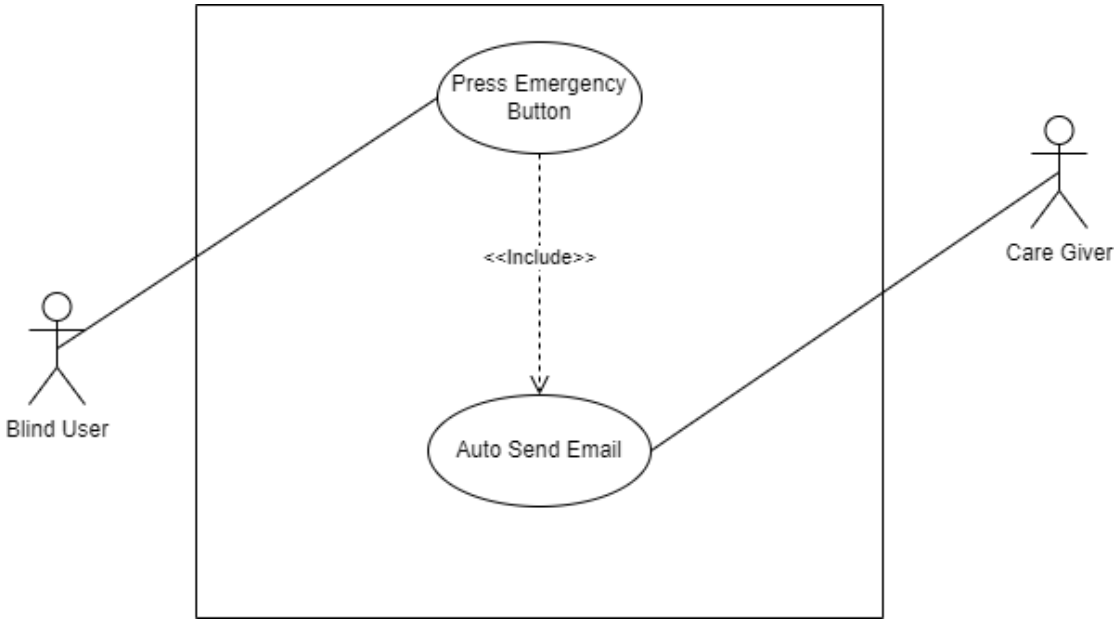

Figure 4: Push Button Mail

3.2.5. Mail cancellation use case model

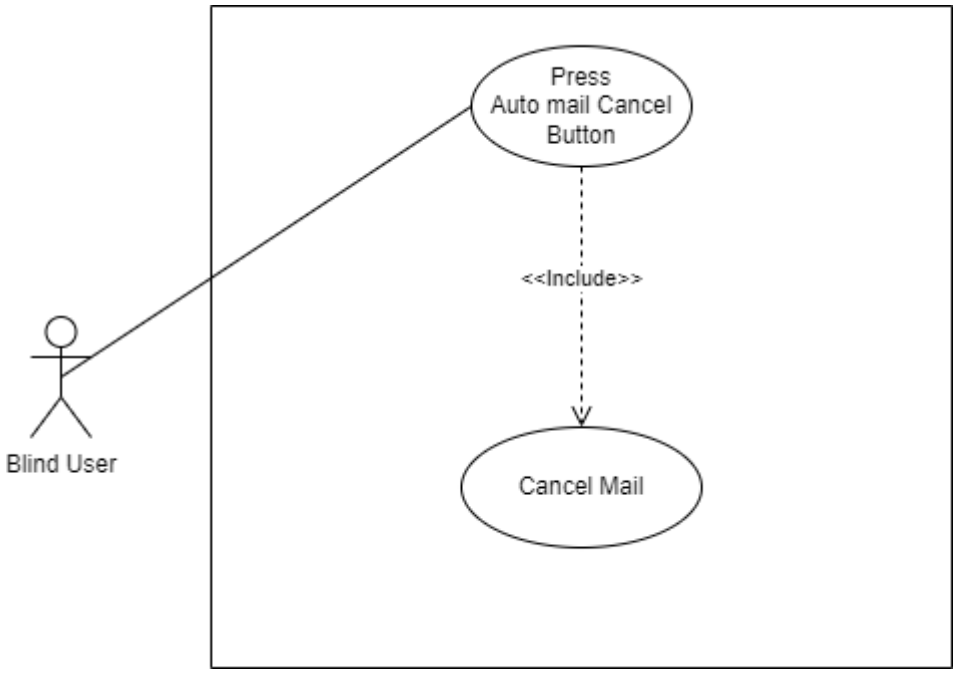

Figure 5:Mail Cancellation

CHAPTER NO.4

DESIGN

4. Design

4.1. Circuit Diagram

A chart that graphically depicts the functional relationships of hardware making up a system [6-8]**.** The circuit diagram shows a complete overview of the components that used in the system and their integration with ESP32.

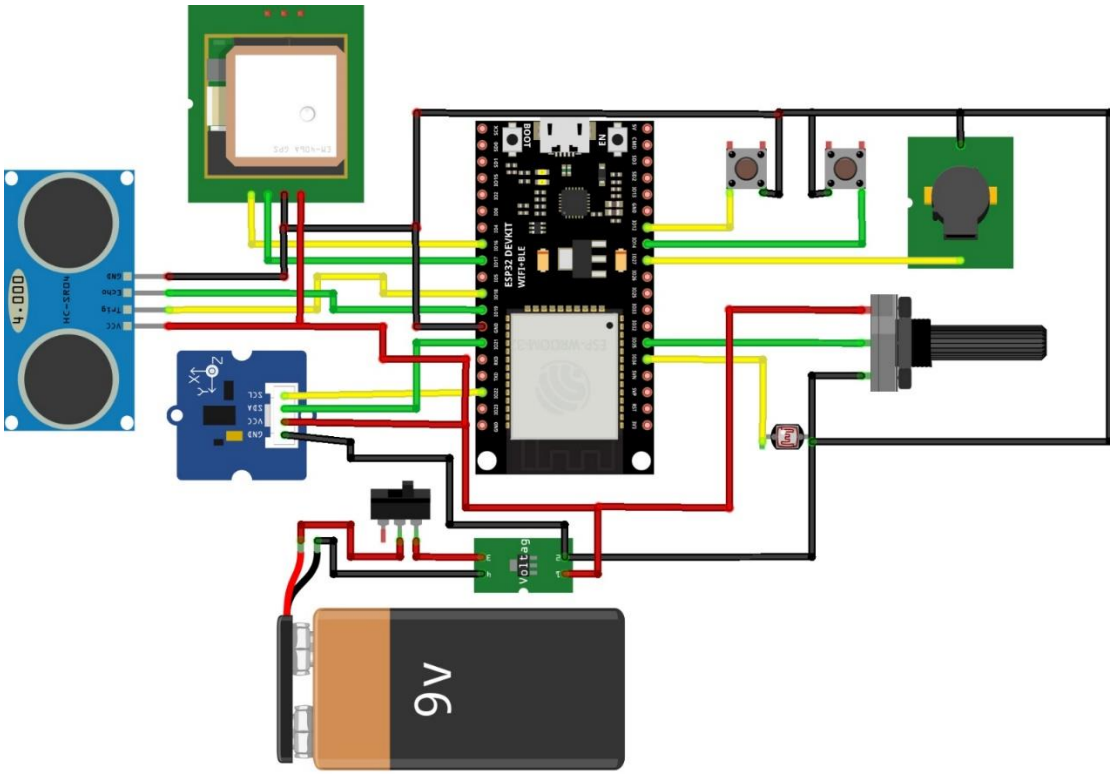

Figure 6: Circuit Diagram

This architecture diagram shows glimpse of the ESP32 Mini controller at the center which interact and communicates with different modules and sensors, such as the ultrasonic sensor, liquid detection sensor, GPS location detector module, and accelerometer. Mini controller ESP32 also controls the buzzer sounds and receive power from 9v battery that passes through the voltage regulator to change it to 5v for the circuit usage.

4.2. Entity-Relationship Diagram (ERD)

The Entity Relationship diagram represents the relationship between different entities in the device. In this case, the main and highlighted entities are the blind person, the caretaker, and the assistive device [9].

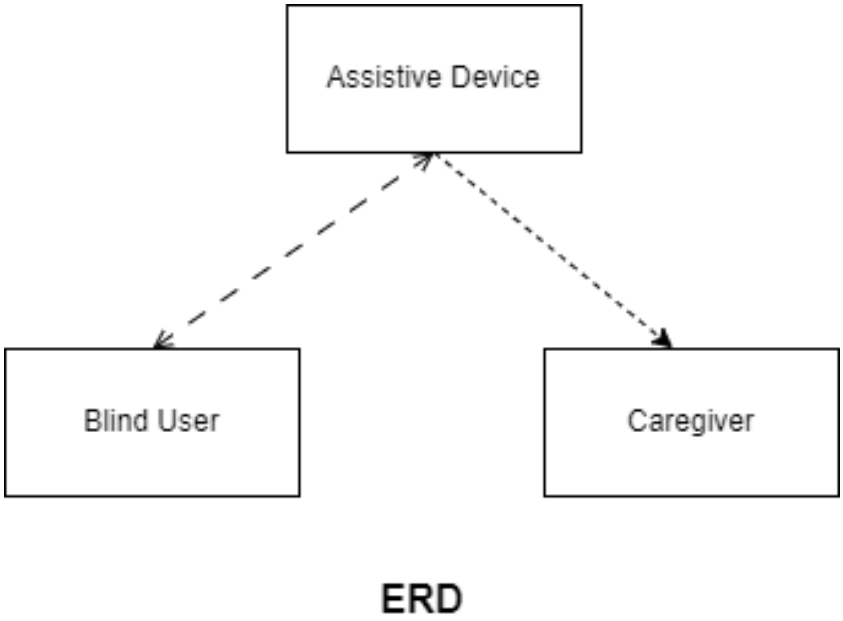

Figure 7: ERD Diagram

The blind user interacts with the assistive device, which is also connected to the caregiver. The ERD shows the dependency of the blind user and the caregiver on the device's functionality.

4.3. Data Flow Diagram (Level 0)

The Level 0 data flow diagram provides a high-level view of the system's data flow.

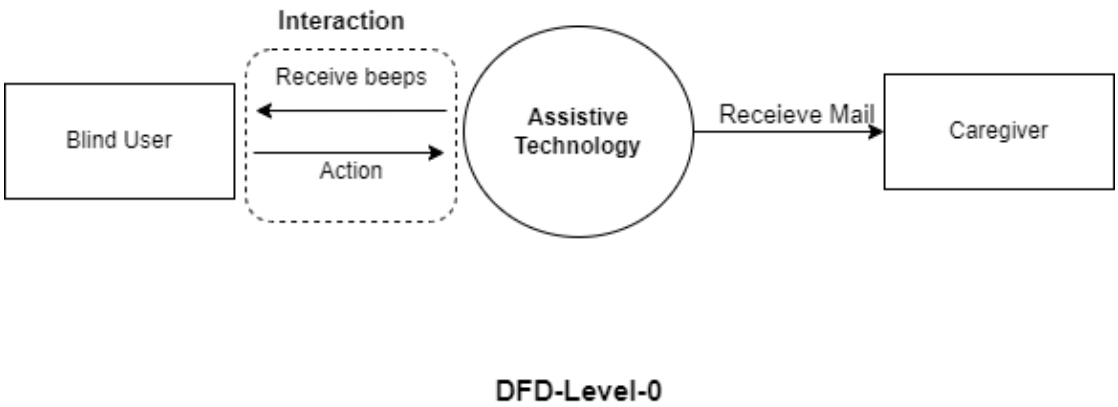

Figure 8: DFD Level-0

The Level 0 diagram shows the data flow between the blind user, caregiver, and assistive device. The blind user and caregiver interact with the device which processes the data generated by the sensors and generates alerts accordingly.

4.4. Data Flow Diagram (Level 1)

The Level 1 data flow diagram provides a detail information of data flow in system and is showing the interactions between components of the device, ESP32, blind user and caregiver.

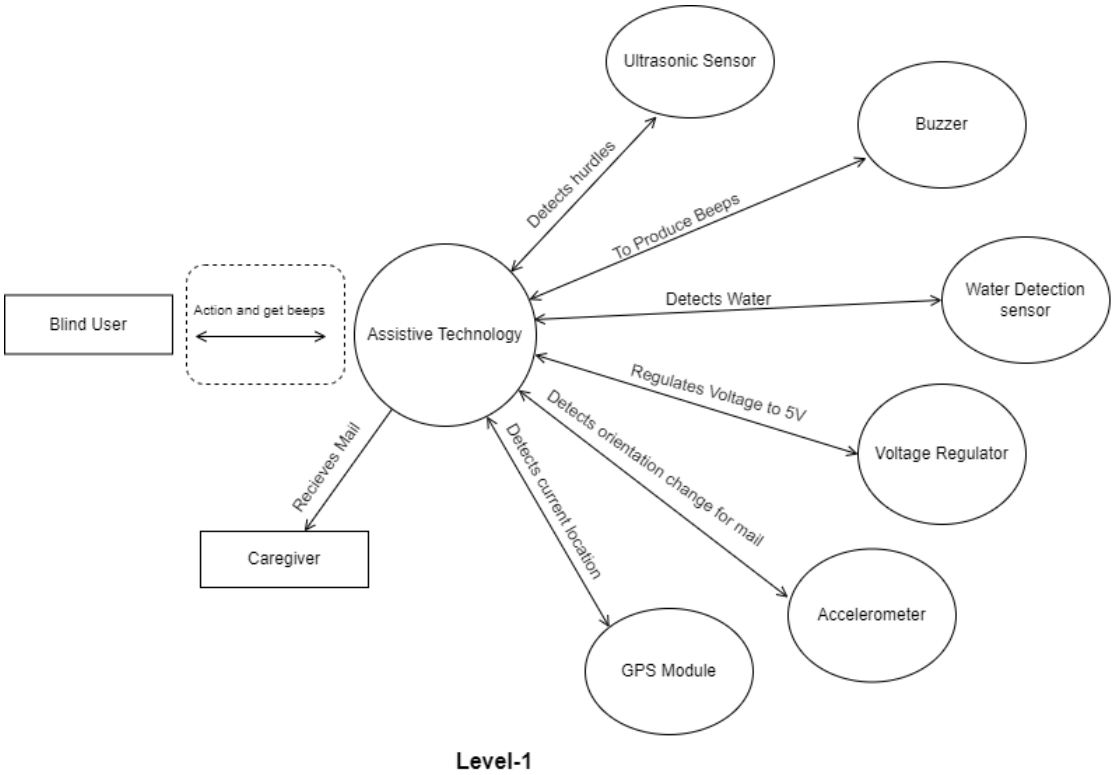

Figure 9: DFD Level-1

The Level 1 data flow diagram shows the interactions between the components of the assistive device. The ESP32 microcontroller connects with the ultrasonic sensor, water detection sensor, GPS module, and accelerometer. The microcontroller also controls the buzzer and receives power from the voltage regulator which is connected to a 9v battery. The blind user and caregiver interact with the device through the microcontroller.

4.5. Class Diagram

The class diagram is representing the static structure of the system and is showing the classes and their relationships.

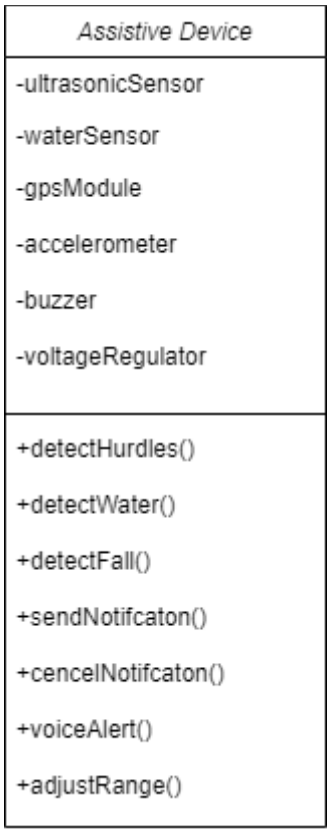

Figure 10: Class Diagram

The class diagram shows the "Assistive Device" class with its attributes (the various components of the device) and methods (the functions performed by the device).

4.6. Sequence Diagrams

4.6.1. System sequence diagram

The sequence diagram is describing the interactions between objects in the system in terms of a time-ordered sequence.

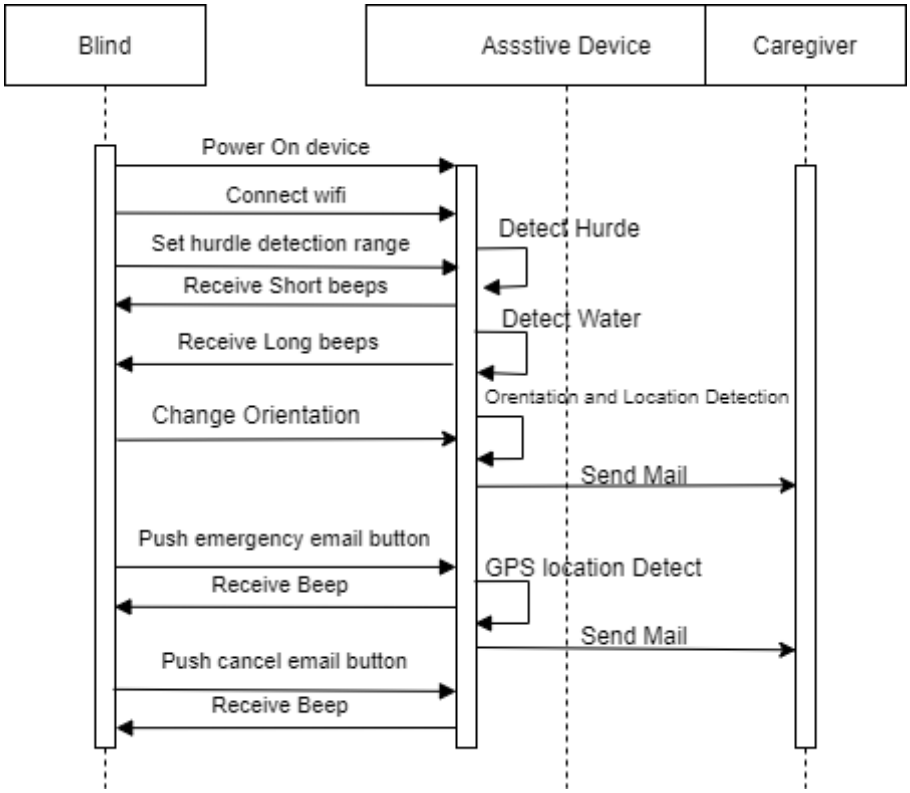

Figure 11: System Sequence Diagram

This sequence diagram shows the time-ordered interactions between the blind user, the assistive device, and the caregiver. The user initiates actions such as detecting obstacles, detecting water, and adjusting the range, sending mail and the device perform functions accordingly.

4.6.2. Obstacle detection sequence diagram

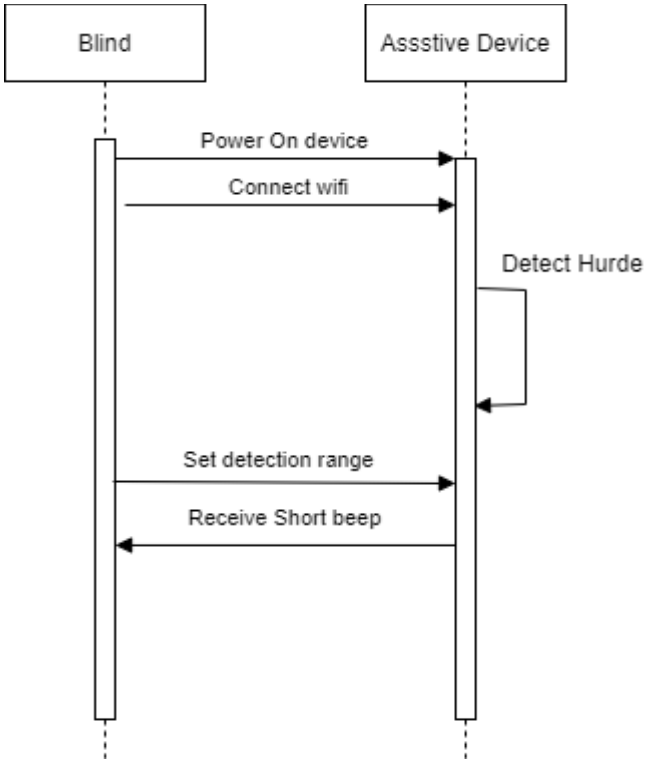

Figure 12: Obstacle Detection Sequence Diagram

4.6.3. Water detection sequence diagram

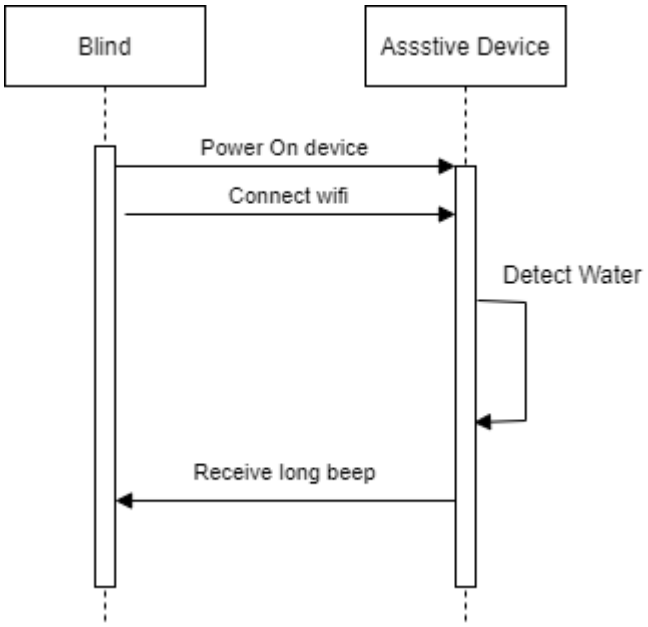

Figure 13: Water Detection Sequence Diagram

4.6.4. Auto emergency mail sequence diagram

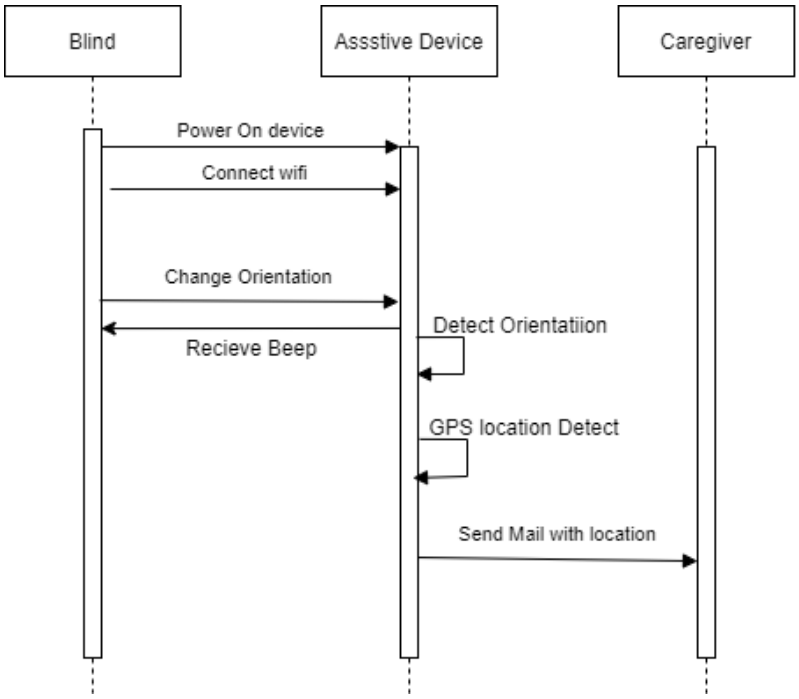

Figure 14: Orientation Detection Sequence Diagram

4.6.5. Push button mail sequence diagram

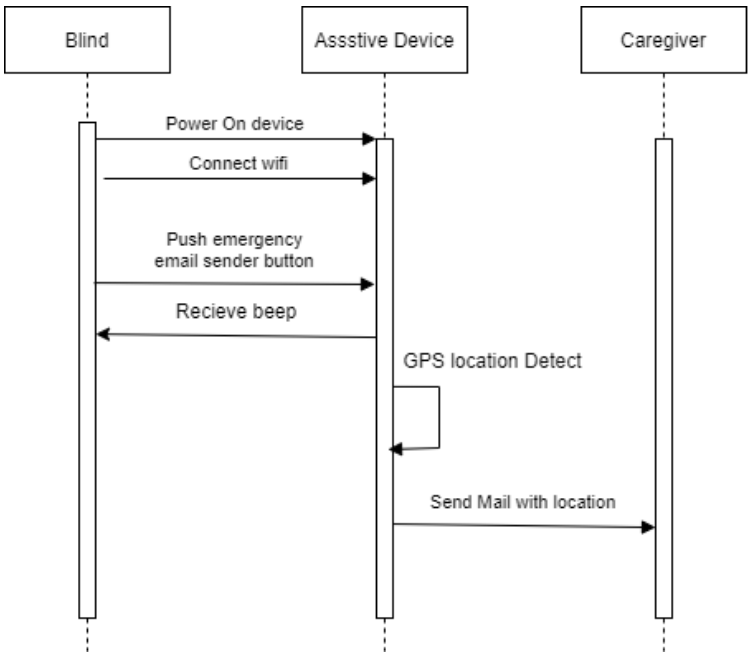

Figure 15: Push Button Mail Sequence Diagram

4.6.6. Mail cancellation sequence diagram

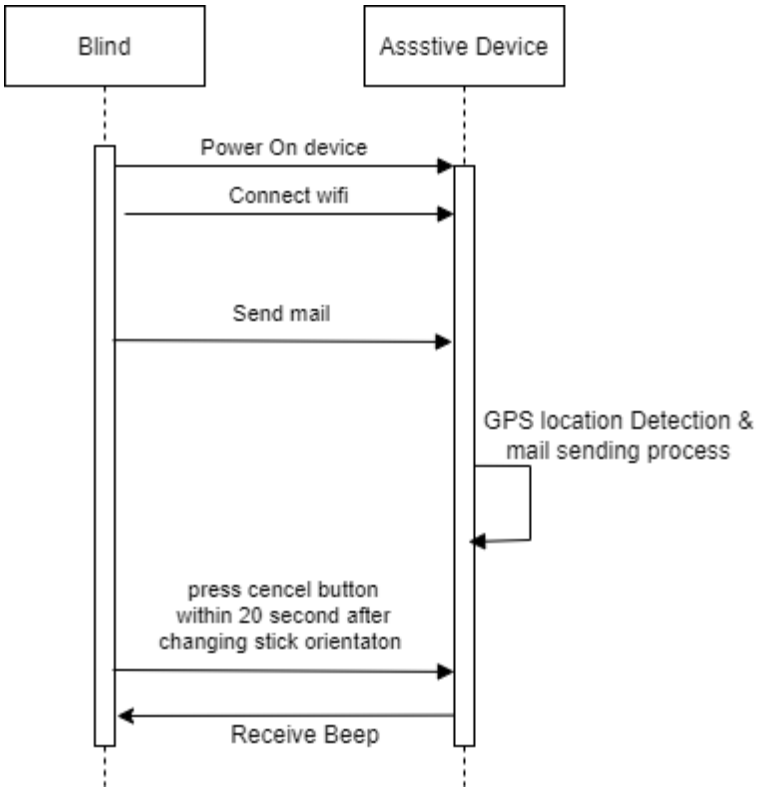

Figure 16: Mail Cancellation Sequence Diagram

CHAPTER NO.5

GRAPHICAL USER INTERFACE

5. Graphical User Interface

Our hardware device is not having a graphical user interface we plan to work for it in future. But our device comprises following user interface.

5.1. Smart Stick

Device is integrated on smart stick having power on/off button, email sending and cancelling button and a scroller to adjust the sensor range to detect hurdles.

Figure 17: Smart Stick UI

5.2. On/Off Button

Power button for powering device on or off.

Figure 18: On/Off Button

5.3. Scroller

Scroller to adjust the range of ultrasonic sensor according to user's preference within specified range.

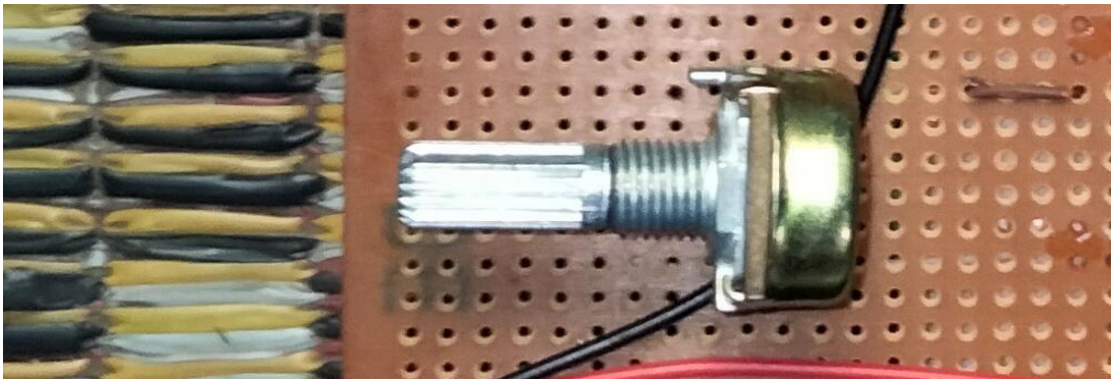

Figure 19: Scroller

5.4. Email Sender Button

In case of emergency user can send email to his/her caretaker of current location for help by using this button.

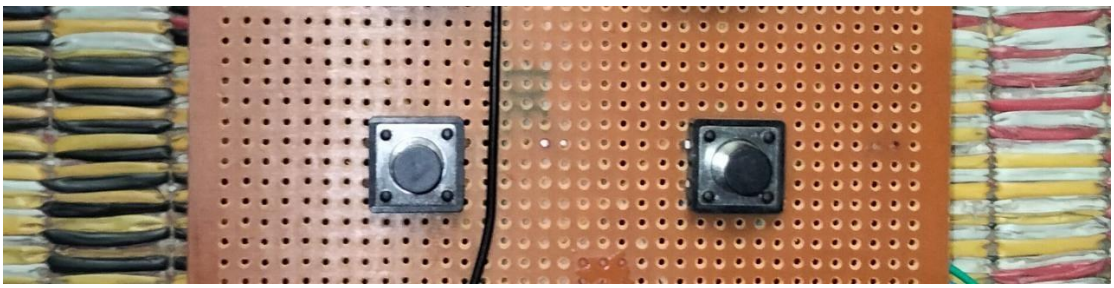

Figure 20: Email Sender Button

5.5. Email Canceler Button

This button works within specific duration of 20 second to cancel mail if user push mail sending button mistakenly or in case of fallen stick from his/her hand user get it back within time.

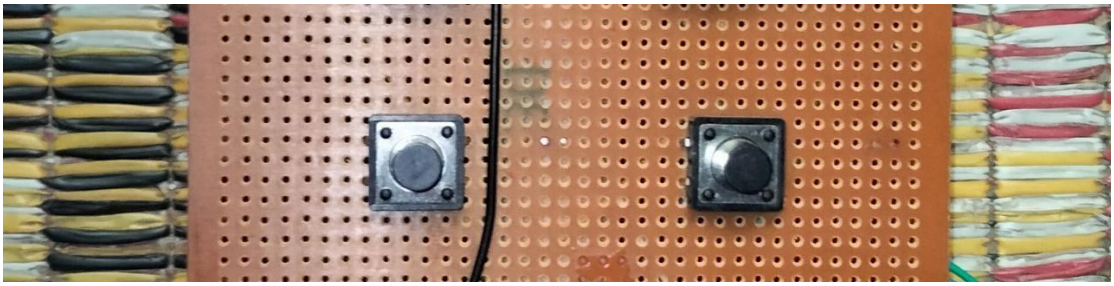

Figure 21: Email Canceller Button

CHAPTER NO.6

TESTING

6. TESTING

6.1. Introduction

Testing is a crucial phase in the development process of any system or product. It ensures that the system meets the requirements, operates correctly, and is free from any defects [10, 11]. Testing includes the processes to test the assistive device, covering test scenarios, test plans, and test case specifications and results.

6.2. Test Scenario

Test scenario for our device is to ensure its effectiveness in helping the blind users in detecting obstacles, water, adjusting the range of ultrasonic sensor to detect static hurdles, stick fell down notification, sending and cancelling emergency notifications to the caregiver when needed.

6.2.1. Obstacle detection test case

Test Case ID: 01

Test Case Name: Obstacle detection test case

Test Priority: High

Preconditions:

a. The device is powered on and connected to the Wi-Fi.
b. The device is having a working ultrasonic sensor for detecting obstacles and obstacles should be within the adjustable range of the ultrasonic sensor (10 cm - 200 cm) that can be adjustable by using scroller.

Postconditions:

a. The device accurately detects obstacles within the adjustable range of the ultrasonic sensor and the user receives short beeps when any obstacle is detected.

SN	Action	Input	Expected Outcome	Actual Output	Testing Area	Test Result	Test Comment
1	Obstacle detection	Static hurdles	Device detects hurdle with adjustable range and produce short beeps.	Device detected the hurdle with changeable range and produced short beeps.	Test done on device.	Passed	The device detected obstacle successfully on frequent test.

Table 6.1: Obstacle Detection Test

6.2.2. Water detection test case

Test Case ID: 02

Test Case Name: Water detection test

Test Priority: High

Preconditions:

a. The device is powered on, connected to Wi-Fi.
b. The device has a working water detection sensor and the environment contains water source to test the detection capability.

Postconditions:

a. The assistive device accurately detects the presence of water and the user receives long beeps when water is detected.

SN	Action	Input	Expected Outcome	Actual Output	Testing Area	Test Result	Test Comment
1	Water detection	Presence of water in the area where device is to be tested.	The device should detect water and produce long beep	The device detected water and produced long beep	Test done on device.	Pass	The device detected the presence of water successfully

Table 6.2: Water Detection Test

6.2.3. Auto emergency mail test case

Test Case ID: 03
Test Case Name: Auto emergency mail
Test Priority: High
Preconditions:

a. The device is powered on and is connected to Wi-Fi.
b. The device is having a working accelerometer to detect when device is rotated and GPS to detect its current location.

Postconditions:

a. The assistive device accurately detects orientation change and sends a mail with location to the caregiver after 20 seconds when a fall is detected.

SN	Action	Input	Expected Outcome	Actual Output	Testing area	Test Result	Test Comment
1	Auto emergency mail	Device is rotated in an emergency	The device should detect the state of stick and generates a mail with location to emergency contact	The device detected the state of stick and send a mail with location to emergency contact.	Test done on device.	Passed	The device successfully sends a mail to the emergency contact.

Table 6.3: Orientation Mail Test

6.2.4. Push button mail test case

Test Case ID: 04

Test Case Name: Push button mail test

Test Priority: High

Preconditions:

a. The assistive device is powered on and is connected to Wi-Fi.
b. The device is having a functional emergency button and GPS to locate user's location and is connected to a mail for sending an emergency mail to caregiver.

Postconditions:

a. The device sends a notification with current location after 20 seconds as mail to the caregiver when button is pressed single time.

SN	Action	Input	Expected Outcome	Actual Output	Testing Area	Test Result	Test Comment
1	Emergency mail test	Press the emergency button	The device should send a mail with location to the emergency contact.	The device sent a mail with location to the emergency contact	Button of device to send mail is pressed	Passed	Mail was received successfully.

Table 6.4: Emergency Mail

6.2.5. Cancel mail test

Test Case ID: 05

Test Case Name: Cancel mail test

Test Priority: High

Preconditions:

a. The device is powered on and is connected to Wi-Fi and is having a functional mail cancel button.
b. Mail is being send mistakenly by pressing button or stick fell down and user wanted to prevent the mail being sent to the caregiver.

Postconditions:

a. The assistive device accurately cancels notifications when cancel button is pressed within 20 seconds.

SN	Action	Input	Expected Outcome	Actual Output	Testing Area	Test Result	Test Comment
1	Cancel mail test	Mail is been sent mistakenly by user after pressing the button or being sent due to stick fell down	Mail should get cancel if button is pressed before 20 seconds	Mail got cancelled	Test done on device.	Passed	the mail was cancelled successfully

Table 6.5: Cancel Mail Test

6.3. Test Plan

The test plan covers the testing environment, test data, and testing procedures. The test plan includes testing the obstacle detection, water detection, orientation change emergency mail, emergency mail by push button and cancellation of mail.

6.4. Definition of Test Cases

Test cases are based on the use cases and functional requirements of the system. Each test case includes a description, input data, expected output, and actual output.

6.5. Test Case Specifications

The test case specifications detail the testing procedure for each test case, including the test case ID, description, input data, expected output, and testing steps.

6.5.1. TC01

Test Case ID: TC01
Description: Test obstacle detection functionality
Input Data: Varying obstacle distances
Expected Output: Short beeps alerting the user about the presence of obstacles
Testing Steps:

a. Place obstacles at various distances from the device.
b. Activate the device and observe the ultrasonic sensor's response.
c. Verify that the device alerts the user with short beeps.

6.5.2. TCO2

Test Case ID: TC02
Description: Test water detection functionality
Input Data: Presence or absence of water
Expected Output: Long beeps alerting the user to the presence of water
Testing Steps:

a. Place the device near a water source.
b. Activate the device and observe the water detection sensor's response.
c. Verify that the device alerts the user with long beeps.

6.5.3. TCO3

Test Case ID: TC03
Description: Test auto emergency mail
Input Data: Rotate the stick
Expected Output: Automatic notification sent to the caregiver
Testing Steps:

a. Simulate an emergency mail by tilting the device.
b. Observe the accelerometer's response.
c. Verify that a notification is sent to the caregiver.

6.5.4. TCO4

Test Case ID: TC04
Description: Test push button mail functionality
Input Data: Pressing the emergency button
Expected Output: Immediate notification sent to the caregiver
Testing Steps:

a. Press the emergency button on the device.
b. Verify that a notification is sent to the caregiver.

6.5.5. TCO5

Test Case ID: TC05
Description: Test cancel notification functionality
Input Data: Pressing the cancel button during the 20-second countdown
Expected Output: No notification sent to the caregiver
Testing Steps:

a. Simulate a fall by dropping or tilting the device.
b. Press the cancel button within the 20-second countdown.
c. Verify that no notification is sent to the caregiver.

6.5.6. TCO6

Test Case ID: TC06
Description: Test adjustability of the ultrasonic sensor range
Input Data: Varying detection range settings
Expected Output: Accurate detection and alerting at the set range
Testing Steps:

a. Set the ultrasonic sensor range using the scroller.
b. Place obstacles at various distances within and outside the set range.
c. Activate the device and observe the ultrasonic sensor's response.
d. Verify that the device detects obstacles and alerts the user within the set range.

6.6. Test Cases Results

The test case results are recorded for both black box and white box test cases. The test results should include the test case ID, expected output, actual output, and test status (pass or fail).

6.6.1. Black Box Test Cases

Black box testing focuses on the system's functionality without considering its internal structure or implementation.

Test Case ID: TC01
Expected Output: Short beeps alerting the user to the presence of obstacles
Actual Output: Short beeps alerting the user to the presence of obstacles
Test Status: Pass

Test Case ID: TC02
Expected Output: Long beeps alerting the user to the presence of water
Actual Output: Long beeps alerting the user to the presence of water
Test Status: Pass

Test Case ID: TC03
Expected Output: Automatic notification sent to the caregiver
Actual Output: Automatic notification sent to the caregiver
Test Status: Pass

Test Case ID: TC04
Expected Output: Immediate notification sent to the caregiver
Actual Output: Immediate notification sent to the caregiver
Test Status: Pass

Test Case ID: TC05
Expected Output: No notification sent to the caregiver
Actual Output: No notification sent to the caregiver
Test Status: Pass

Test Case ID: TC06
Expected Output: Accurate detection and alerting at the set range
Actual Output: Accurate detection and alerting at the set range
Test Status: Pass

6.6.2. White Box Test Cases

White box testing involves testing the internal structure and implementation of the system, focusing on code coverage, data flow, and control flow.

Test Case ID: WTC01
Description: Test ultrasonic sensor module code
Expected Output: Correct operation and communication with the ESP32 microcontroller
Actual Output: Correct operation and communication with the ESP32 microcontroller
Test Status: Pass

Test Case ID: WTC02
Description: Test water detection module code
Expected Output: Accurate water detection and communication with the ESP32 microcontroller
Actual Output: Accurate water detection and communication with the ESP32 microcontroller
Test Status: Pass
Test Case ID: WTC03
Description: Test accelerometer module code
Expected Output: Accurate fall detection and communication with the ESP32 microcontroller
Actual Output: Accurate fall detection and communication with the ESP32 microcontroller
Test Status: Pass

Test Case ID: WTC04
Description: Test notification system code
Expected Output: Accurate and timely notifications sent to the caregiver
Actual Output: Accurate and timely notifications sent to the caregiver
Test Status: Pass

In conclusion, the assistive device for the blind has undergone rigorous testing, both black box and white box, to ensure that it meets the functional requirements and provides the desired assistance to blind users. The successful test results demonstrate the effectiveness and reliability of the device, making it a valuable tool for enhancing the quality of life for blind individuals.

CHAPTER NO.7

CONCLUSION AND FUTURE WORK

7. CONCLUSION AND FUTURE WORK

7.1. Conclusion

The device offers an innovative solution to the challenges faced by visually impaired individuals allowing them to move around with easiness and safety. With the integration of various sensors and components it provides adaptable and user-friendly assistive device for navigating in different environments. It allows the user to send emergency mail with location, also helps to detect moist/rainy environment with detection of static hurdles within specified range.

7.2. Future Work

7.2.1. Addition of a voice guidance system:

We are planning to add a text-to-speech module with to our device that could provide spoken instructions and alerts. This would be helpful for a natural interaction between the user and the device.

7.2.2. Addition of a voice command system:

We are planning to add a voice command module to our device that could provide feature to give voice commands to the controller. This would be helpful for a natural interaction between the user and the device.

7.2.3. Machine learning and computer vision:

We are planning to add machine learning algorithms and computer vision technology that could enable the device to recognize and identify various objects, obstacles and persons in the user's environment. This would provide a more advanced level of assistance and navigation support.

7.2.4. Enhanced GPS accuracy:

We focus to advance GPS module for outdoor and indoor navigation, such as differential GPS or RTK that could improve the location accuracy of the device. It would result in better navigation and tracking capabilities either outdoor or indoor.

7.2.5. Cloud-based data storage and analysis:

The device will be connected to a cloud-based system allowing it store and analyses user data, such as traveled routes, detected obstacles, remembered persons, objects, and environmental conditions. This information can be used to improve the device's performance.

7.2.6. Improved battery life and power management:

Research and implement more efficient power management techniques to extend the device's battery life, making it available for more usage.

7.2.7. Collaboration with other assistive technologies:

It’s a possibility to integrate the device with other assistive technologies, such as smart wearables, smartphone apps that could offer users a better performing assistant device.

By addressing these potential areas of improvement and innovation, the assistive device for blind will continue to evolve and serve the needs of visually impaired individuals that would ultimately enhance their quality of life and independence.

7.2. Appendix

The appendix section of the documentation contains additional information such as diagrams and references that provide a deeper understanding of the topic. This section serves as a supplement to the main content and contains information for readers.

7.2.1. Ultrasonic Sensor Specifications

The specifications of the ultrasonic sensor used in the assistive device are listed below:

- Operating Voltage: 5V DC
- Operating Frequency: 40 kHz
- Maximum Range: 200 cm
- Minimum Range: 2 cm
- Measuring Angle: 15 degrees
- Response Time: 2 ms

7.2.2. Alert System

The alert system used in the assistive device uses alerts to inform user as short, long, and continuous.

7.3. References:

1. Michael T. Hartley, P.D.C.R.C. and P.D.C.R.C. Vilia M. Tarvydas, *The Professional Practice of Rehabilitation Counseling*. 2022: Springer Publishing Company.
2. Kauffman, J.M. and D.P. Hallahan, *Handbook of Special Education*. 2011: Taylor & Francis.
3. Nawandar, P. and V.V. Gohokar. *Design and development of multisensory smart assistive technology for blind persons*. in *2018 International Conference on Research in Intelligent and Computing in Engineering (RICE)*. 2018. IEEE.
4. Real, S. and A. Araujo, *Navigation systems for the blind and visually impaired: Past work, challenges, and open problems.* Sensors, 2019. **19**(15): p. 3404.
5. https://kidshealth.org/en/teens/visual-impairment.html#:~:text=Visual%20impairment%20is%20a%20term,have%20what's%20called%20legal%20blindness.
6. Graf, R.F., *Modern Dictionary of Electronics*. 1999: Elsevier Science.
7. *Engineering: Issues, Challenges and Opportunities for Development*. 2010: UNESCO Publishing.
8. Santiago, J., *Circuit Analysis For Dummies*. 2013: Wiley.
9. Seel, N.M., et al., *Instructional Design for Learning: Theoretical Foundations*. 2017: SensePublishers.
10. Miller, L.C. and P.H. Gregory, *CISSP For Dummies*. 2022: Wiley.
11. Ghaoui, C., *Encyclopedia of Human Computer Interaction*. 2005: Idea Group Reference.